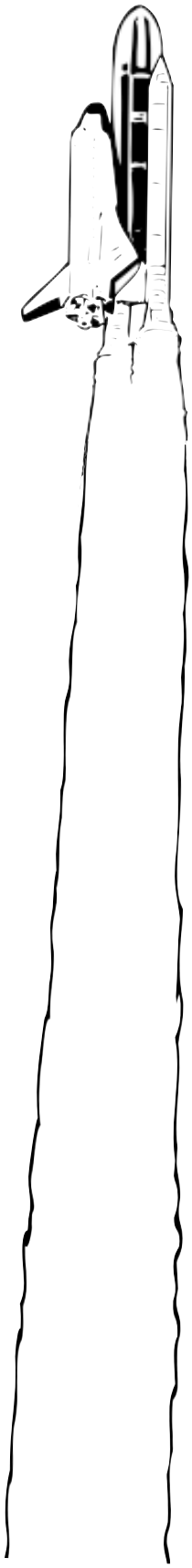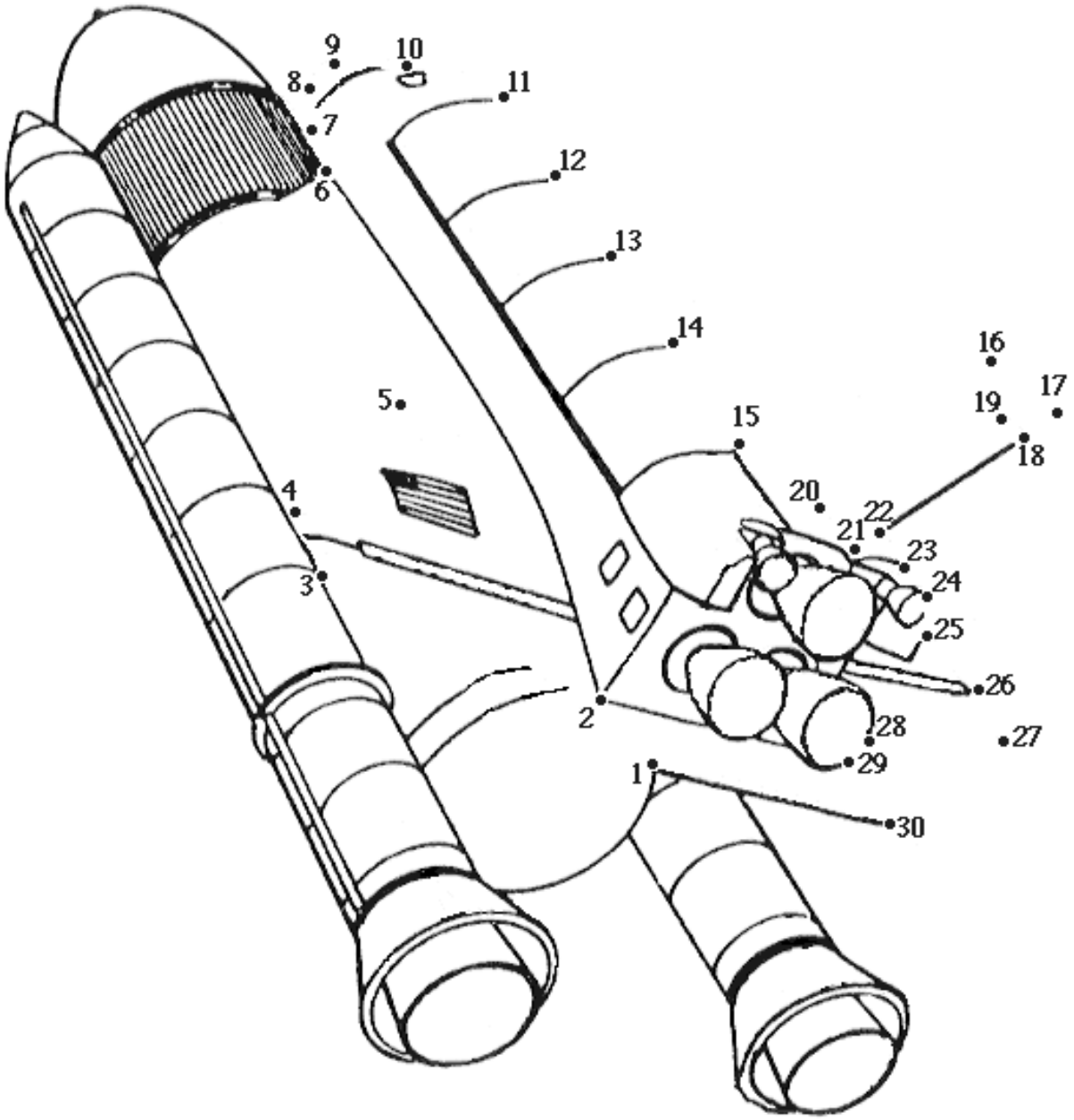Space Shuttle Dot-to-Dot